Civil Improvement Plans Checklist

Background

The City of North Las Vegas strives to provide the development community with adequate and relevant information to ensure timely, successful completion of all projects within the City. To aid in the submittal of a complete civil improvement plan package, the following checklist has been compiled to inform the design engineer of requirements specific to the City of North Las Vegas. When preparing civil improvement plans, the engineer is still required to adhere to all local criteria and guidelines as set forth in the City of North Las Vegas Municipal Code and Planning Commission conditions of approval and the *Uniform Standard Drawings for Public Works' Construction Off-site Improvements* for Clark County Area, Nevada. **The engineer's design must comply with this *Civil Improvement Plan Checklist*. Any items not in compliance must be noted hereon and discussed at the project's Pre-submittal Meeting. If adequate justification is not provided, the engineer will receive direction to make the appropriate corrections and the Pre-submittal Meeting will be repeated.**

To acquire the most recent version of General Notes, please visit:

http://www.cityofnorthlasvegas.com/departments/public_works/civil_improvement_plan_review_and_permitting.php

Checklist

MISCELLANEOUS REQUIREMENTS

- ☐ Planning Commission Conditions of Approval
- ☐ Developer Questionnaire
- ☐ Civil Improvement Plan Submittal Application and applicable fees
- ☐ Technical Drainage Study approval letter
- ☐ Traffic Study approval letter
- ☐ Geotechnical Report
- ☐ NDOT permit required? (See current NDOT State Maintained Highways document)
- ☐ Completed Bond and Fees Estimate - bond amounts must match quantities on the plans
- ☐ All offsite improvements MUST be designed and bonded with the first phase of development
- ☐ If grading is proposed on adjacent parcels, notarized permission to grade letters from all impacted land owners must be received prior to plan approval.
- ☐ Coordinate with and identify City CIP projects and show the improvements on the plans
- ☐ All Dry Utility signatures must be acquired prior to submittal of mylar plans to the City
- ☐ Plan sheets must be 24"x36"

SPECIAL REQUIREMENTS FOR UTILITY SUBMITTALS

- ☐ Hydraulic Network Analysis – to view the guidelines please visit: http://www.cityofnorthlasvegas.com/docs/PublicWorks/NetworkHydraulicAnalysisGuidelines.pdf (Upon approval of the HNA the engineer shall email a pdf to appropriate staff)
- ☐ Digital Submittal (CD) of HNA Model in EPA NET format for projects 40 acres or greater
- ☐ Water Usage form with initial application for all Commercial / Industrial developments
- ☐ Provide mechanical restrained joint calculations, stamped and signed per guidelines: http://www.cityofnorthlasvegas.com/About/PDFs/MechanicalJointRestraints.pdf
- ☐ Sewer analysis may be required for a multi-phased project – as determined by staff

COVER AND/OR NOTE SHEET

- ☐ CNLV general notes
- ☐ Project Name
- ☐ CNLV and Dry Utility Approval blocks
- ☐ Engineer's seal in accordance with NRS 625 and NAC 625
- ☐ Benchmark checked to match CNLV book
- ☐ Basis-of-bearing
- ☐ Reference to Parcel / Final Map (to be filled in upon recording)
- ☐ Abbreviations and Legend
- ☐ CNLV project number located in the lower right hand corner of each plan sheet (will be assigned after initial submittal of the civil plans)
- ☐ Sheet Index shown and checked to see that sheet names and numbers match
- ☐ Owner's name and address
- ☐ Developer's name and address
- ☐ Vicinity map showing project location with north arrow
- ☐ APN's listed and acreage of each parcel
- ☐ Total Area of Land Disturbance (for Clark County Desert Conservation Program)
- ☐ List of Quantities
- ☐ Cut and Fill Quantities
- ☐ Number of units/lots
- ☐ Utility services and provider
- ☐ Geotechnical Report information - geotechnical report must be less than one year old
- ☐ Print sizes L80 or greater

HORIZONTAL CONTROL

- ☐ Must be its own separate sheet(s) for retail/commercial/industrial projects. Residential subdivisions may provide a Monumentation Plan with pertinent Horizontal Control information shown on Grading, Utility, Plan & Profile and Traffic sheets
- ☐ Engineers Seal in accordance with NRS 625 and NAC 625
- ☐ CNLV project number located in the lower right hand corner of each plan sheet (will be assigned after initial submittal of the civil plans)
- ☐ Adjacent project plans denoted on the plan sheets – provide names, improvements (existing and proposed) and line work
- ☐ Show roadway easements for commercial driveways, commercial sidewalk easement, pedestrian access easements, and public utility easements being created based on proposed plan whether granted by separate document or map
- ☐ 5' Public Utility Easement adjacent to all rights-of-way surrounding the project
- ☐ BLM Right-of-Way Grant # (if applicable)
- ☐ All pertinent line and curve data must be tabled
- ☐ Bearings provided for all street center lines
- ☐ Provide center line street station and station equations for all intersections
- ☐ Provide stations at all property line locations
- ☐ Prominent back of curb locations (i.e. PC, PCC, PT, BCR, etc) must be shown via station and offset from street centerline
- ☐ Existing survey monuments used to construct the project must be identified on the plan. Proposed survey monuments, per the *Clark County Area Uniform Standard Drawings* are required and shall be installed at the 1/4 and 1/16 corners, as well as all street centerline PT, PC, PRC locations.
- ☐ All survey monuments surrounding the perimeter of the project, existing or proposed, must be included as bonded public items in the Bond & Fee Estimate.

Checklist (cont.)

HORIZONTAL CONTROL (CONT.)

☐ Existing survey monuments shall be protected in place if they will not be affected by construction of the project, or removed and replaced per the applicable Clark County Standard Drawing if they will be affected. Add the following note where applicable: **"PRIOR TO THE START OF CONSTRUCTION, REFERENCE EXISTING MONUMENT PER *CLARK COUNTY AREA UNIFORM STANDARD DRAWING* NO. 242. UPON COMPLETION OF STREET CONSTRUCTION, REPLACE WITH TYPE I MONUMENT PER *CLARK COUNTY AREA UNIFORM STANDARD DRAWING* NO. 239 WITH REFERENCES."**

FIRE ACCESS PLAN

☐ Must be its own separate sheet; except in cases where no offsites are being constructed Traffic Plan may be combined with Fire Access Plan

☐ **Fire hydrant locations.** Fire hydrants shall be provided along required fire apparatus access roads.

- **Intersections.** The spacing of fire hydrants shall start by placing fire hydrants at all intersections.
- **R-3 Occupancies and single-family dwellings built under the IRC.** In all residential areas (R-3 occupancies and single-family dwellings built under the IRC only), hydrants shall be spaced not to exceed 500 feet, or 600 feet if all homes are protected by approved automatic fire sprinkler systems.
- **Distance from Hydrant to R-3 Occupancy and single-family dwelling built under the IRC.** The maximum distance from a one- or two-family dwelling to a fire hydrant shall not exceed 300 feet, as measured from an approved point on a street or road frontage to a fire hydrant. An approved point is defined as the property line furthest from the hydrant, at a right angle to the street.
- **Commercial and Residential Occupancies other than R-3 and single-family dwelling built under the IRC.** In all commercial and industrial areas, including multi-family R-1 and R-2 occupancies, hydrants shall be spaced not to exceed 300 feet, or 400 feet if all buildings are protected by approved automatic sprinkler systems.
- **Distance to Dead-End Street.** The maximum distance from a hydrant to the end of a dead-end street shall not exceed 200 feet.
- **Distance to a Fire Department Connection (FDC).** The maximum distance from a fire hydrant to a fire department connection (FDC) supplying fire sprinklers and/or standpipes shall not exceed 100 feet, as measured by an approved route. An approved route is defined as an unobstructed path of travel on which hose can easily be laid.
- **Spacing Along Major Streets.** Where streets are provided with median dividers, or have four or more travel lanes and a traffic count of more than 30,000 vehicles per day, hydrants shall be spaced at a maximum of 1,000 feet along both sides of the street; arranged on an alternating basis at 500–foot intervals.
- **Hydrants Provided with New Water Mains.** Where new water mains are extended along streets where hydrants are not needed for protection of structures or similar fire problems, fire hydrants shall be provided at spacing not to exceed 1,000 feet to provide water for transportation hazards.
- **Hydrant Clearances from Structures.** No fire hydrant shall be located within 6 feet of a driveway, power pole, light standard, or any other obstruction. For wall, fence and planter locations, a perimeter around the hydrant measuring a minimum of 3 feet from its exterior shall be maintained clear of all obstructions at all times. All hydrants must be 15 feet from commercial driveways curb return. Fire hydrants must be stationed with streetlights shown to verify there are no conflicts.

- **Hydrant set-back from curbs.** Fire hydrants shall be located 4 feet to 7 feet from the back of curb. Where it is not possible to locate the hydrant a minimum of 4 feet from the back of the curb, the hydrant shall be protected against vehicular impact in accordance with Section 312. Detail shall be provided.
- **Hydrant Pad.** A concrete pad, with minimum dimensions of 3 feet by 3 feet, with a minimum depth of 10 inches, shall be provided at each fire hydrant.
- **Construction Hydrants.** Hydrants shall be provided for construction in accordance with Section 3312.

☐ **Location of Fire Riser Room.** A dedicated automatic sprinkler system riser room shall be required for each fire sprinkler system riser. When approved, where a single system serves the building and the system is controlled by a PIV, a riser room is not required.

- **Exterior Access Door.** Automatic sprinkler system riser rooms shall have an exterior access door with a minimum width of 36 inches (914 mm) and a minimum height of 80 inches (2032 mm).
- **Protection.** Automatic sprinkler system riser rooms shall be separated from the rest of the building by 1-hour fire partitions.
- **Size.** The riser room shall have a minimum area of 16 square feet (1.49 m2), with a minimum dimension of 4 feet for the first sprinkler riser plus an additional 9 square feet for each additional riser contained.

☐ **Fire Department Connection (FDC) locations**. When automatic fire protection is required, the fire department connection (FDC) shall be so located that fire apparatus and hose connected to supply the system will not obstruct access to the building for other fire apparatus. It shall be located on the street side of buildings, fully visible and recognizable from the street or nearest point of fire department vehicle access. Immediate access to FDC shall be maintained at all times and without obstruction by fences, bushes, trees, walls or any other fixed or moveable object.

- **Required sizes.** Automatic sprinkler systems with a demand of up to 500 gpm shall be installed with a siamese with two 2½-inch. (65 mm) inlets. Automatic sprinkler systems with a demand greater than 500 gpm and an inlet pressure requirement not exceeding 175 psi shall be installed with a single, thread-less coupling consisting of one 5-inch (130 mm) Storz brand locking connection with a 30-45 degree downward deflection. When the system demand exceeds 175 psi, the system shall include one 2½-inch (65 mm) inlet per every 250 gpm (956 L/min) demand. Fire department connection piping shall be a minimum of 4-inch (100 mm) for three or fewer inlets, a minimum of 6 in (150 mm) for four or more inlets or a Storz inlet and shall have a diameter equal or greater to the largest supply main.
- **Clear space around connections.** A working space of not less than 36 inches (762 mm) in width, 36 inches (914 mm) in depth and 78 inches (1981 mm) in height not including any doors or windows, shall be provided and maintained in front of and to the sides of wall-mounted fire department connections and around the circumference of free-standing fire department connections, except as otherwise required or approved by the fire code official. **Exception:** The FDC may be permitted within 36 inches of the fire riser room door opening as long as it is mounted on the opposite side of the hinges. Free-standing fire department connections shall be labeled with the address of the building(s) served.

☐ **Fire apparatus access roads**. Fire apparatus access roads shall be shaded with all radii labeled. Provide an overall fire apparatus access plan including, but not limited to: primary and secondary fire access roads, fire hydrants, painted curbs, stenciling signage, fire signage details and a "Building and Fire Safety" Signature block. Fire apparatus access roads must meet the following minimum requirements:

- **Buildings and facilities.** Approved fire apparatus access roads shall be provided for every facility, building or portion of a building hereafter constructed or moved into or within the jurisdiction. The fire apparatus access road shall comply with the requirements of this section and shall extend to within 150 feet (45 720 mm) of all portions of the facility and all portions of the exterior walls of the first story of the building as measured by an approved route around the exterior of the building or facility. An approved route is defined as an unobstructed path of travel on which hose can easily be laid.
- **Additional access.** The fire code official is authorized to require more than one fire apparatus access road based on the potential for impairment of a single road by vehicle congestion, condition of terrain, climatic conditions or other factors that could limit access. *Approved secondary access for ingress* shall be provided for 20 or more dwelling units, road(s) with dead ends or with a single point of access in excess of 600 feet (182 880 mm), and for all commercial and industrial developments.
- **Dimensions.** Fire apparatus access roads shall have an unobstructed width of not less than 24 feet (7315 mm), exclusive of shoulders, except for approved access gates in accordance with Section 503.6, provided no parking is allowed, and not less than 40 feet if parallel parking is allowed on both sides, and an unobstructed vertical clearance of not less than 13 feet 6 inches (4115 mm).
- **Dimensions for Group R, Division 3 Residential Subdivisions.** For Group R, Division 3 Residential Subdivisions, the minimum width of fire apparatus access roads is 36 feet (10 973 mm), measured face of curb to face of curb. **Exception:** Fire apparatus access roads may be reduced to 24 feet (7315 mm) in width provided that all homes are provided with an approved automatic sprinkler system and on-street parking is prohibited.
- **Surface.** Fire apparatus access roads shall be designed and maintained to support the imposed loads of fire apparatus, with a minimum vehicle load of 33,000 pounds per axle, and shall be surfaced and paved so as to provide all-weather driving capabilities. **Exception:** Temporary access roads serving only buildings under construction shall not be required to be paved.
- **Turning radius.** The required turning radius of a fire apparatus access road shall be no less than 28 feet inside turning radius and 52 feet outside turning radius.
- **Dead ends.** Dead-end fire apparatus access roads in excess of 150 feet (45 720 mm) in length shall be provided with an *approved* area for turning around fire apparatus. A clear turnaround with a diameter of 90 feet measured face of curb to face of curb for one- and two-family dwellings and 104 feet for commercial and industrial areas, including multi-family R-1 and R-2 occupancies.
- **Grade.** The grade of the fire apparatus access road shall not exceed 12 percent.
- **Angles of approach and departure.** The angles of approach and departure for fire apparatus access roads shall have a maximum grade change of 6 percent for 25 feet (7.6 m) before or after the grade change.
- **Fire Apparatus – Point Load.** Fire apparatus access roads including elevated portions shall be designed with a ground bearing capacity not less than 75 psi (500 kPa) over the ground contact area.
- **Marking.** Fire apparatus access roads shall be marked where required to prohibit parking and other obstructions. Marking shall consist of painting the curb, or the side of the street, where no curb is present, with a suitable coat of industrial red enamel along the entire length of road where parking is prohibited. Each section of curb that is painted red shall also be marked by signage stating “NO PARKING FIRE LANE” (Type A sign). Signs are to be installed no higher than 10 feet or less than 7 feet above the surface of the roadway. Signs shall be located at each end of painted curb, and additionally in between so that the

maximum separation between signs is 100 feet, as measured along the centerline of the fire apparatus access road.

TYPE A SIGN

- In lieu of providing multiple signs, where a minimum of one sign is provided at every entrance stating "ON-STREET PARKING IN MARKED FIRE LANES PROHIBITED" (Type B sign), fire lanes may be marked by painting the words "NO PARKING FIRE LANE", over the face of the red-painted curbs (Type C sign). The words on the curbs shall be painted in white letters not less than 4 inches in height with a brush stroke of not less than ¾ inch. The maximum separation between markings shall be 50 feet, as measured along the centerline of the fire apparatus access lane.

TYPE B SIGN

TYPE C CURB MARKING

- **Sign and curb marking specifications**. Where required by the fire code official signs shall be in accordance with the following:
  - **Type A:** Minimum dimension of 18 inches (457mm) high by 12 inches (305 mm) wide. Red letters on a reflective white background with 3/8 inch red trim around entire outer edge of sign. Lettering shall be: "FIRE LANE"
  - **Type B:** Minimum dimension of 24 inches (610 mm) wide by 18 inches (457 mm) high. Red letters on reflective white background with 3/8 inch red trim strip around the entire outer edge of sign. Lettering on sign shall be: "ON-STREET PARKING IN MARKED FIRE LANES PROHIBITED"
  - **Type C:** Minimum dimension of 36 inches (914 mm) wide by 4 inches (101 mm) high. White letters on red enamel background. Lettering on curb shall be: "NO PARKING FIRE LANE"
  - Signs shall be installed not less than 7 feet (2134 mm) and not more than 10 feet (3048 mm) above the ground level. Posts for signs shall be metal and securely mounted,

unless written permission for alternatives is obtained prior to installation from the fire code official.
- ❖ A detail of which sign will be utilized shall be included.

☐ **Access Gates** The installation of access gates across a fire apparatus access road shall be approved by the fire code official. Where access gates are installed, they shall have an approved means of emergency operation. The access gates and the emergency operation shall be maintained operational at all times. The minimum clear opening width shall be 20 feet. Denote where gates are planned to cross fire access lanes.

- ➢ **General.** Fire apparatus access roads that are secured by gates shall comply with the specifications of the Fire Department.
- ➢ **Electronically controlled gates.** Electronically controlled gates shall be provided with an approved vehicle detector/receiver system in accordance with the rules and regulations specified by the Fire Department. Access gates shall be maintained operational at all times. When electronically controlled gates are out of service, they shall be secured in the open position until repairs are complete. Repairs shall be in accordance with original specifications. **Exception:** When approved by the fire code official, electronically controlled gates that are manned on a 24-hour basis.
- ➢ AVI loop shall be located 10 feet, no more than 50 feet, measured perpendicular to the face of the access gate along the route of arrival, 10 feet from the public right-of-way and from the access gate.
- ➢ AVI Loop shall be installed within 3 feet of the curb line on each side of the loop.
- ➢ AVI shall be identified with a green reflective marker located in the center of the
- ➢ Include note on plans: “Gate shall be electrically-powered with battery back-up, with a minimum 20 foot clear opening width and equipped with AVI loop opening system”
- ➢ For one- and two family dwellings where the developer chooses to provide a dedicated emergency only access, such access shall be:
  - ❖ Paved or provided with a “suitable alternative” such as approved pavers
  - ❖ Have a minimum width of 24 feet
  - ❖ Electrically-powered with battery back-up and equipped with AVI loop
  - ❖ Manual gate with KNOX box on both sides or KNOX padlock accessible from both sides is acceptable (in single family DETACHED home subdivisions)
  - ❖ Provide a driveway from the perimeter street that meets the standards of CCASD 224, if the sidewalk is offset from the curb and gutter or 226.S1 if the sidewalk abuts the curb and gutter.
  - ❖ The following notes must be provided for the applicable situation:
    - ▪ For Manual Gate: “Gate shall have a 20 foot clear opening width with Knox box on both sides or Knox padlock accessible from both sides”
    - ▪ For Electric Gate: “Gate shall be electrically-powered with battery back-up, with a minimum 20 foot clear opening width and equipped with AVI loop opening system”

UTILITY PLAN

☐ Engineer’s seal in accordance with NRS 625 and NAC 625
☐ Print sizes L80 or greater
☐ Call Before U Dig note/ Call Before You Overhead / FAST
☐ Key Map
☐ North arrow (pointing upward or to the right) and bar scale (1”=40’ maximum)
☐ CNLV project number located in the lower right hand corner of each plan sheet (will be assigned after initial submittal of the civil plans)

Checklist (cont.)

UTILITY PLAN (CONT.)

- ☐ Approved street names and identification as public or private
- ☐ Identify NDOT right-of-way
- ☐ Street widths
- ☐ Driveway locations
- ☐ Lot numbers and unit/building numbers where applicable
- ☐ Adjacent project plans denoted on the plan sheets – provide names, improvements (existing and proposed) and line work
- ☐ Wastewater demand computation table
- ☐ Design of the utilities must follow all requirements set forth by the Utilities Department, the Uniform Design and Construction Standards for Potable Water Systems (latest edition), and Design and Construction Standards for Wastewater Collection Systems (latest edition) , including CNLV Addenda for each standard
- ☐ Minimum water main size is based on street width (may be modified by staff):
  - ☐ 60' r/w or less = 8"
  - ☐ 61' – 80' = 10"
  - ☐ Greater than 80' = 12"
- ☐ Master Utility Plan (required if more than one utility sheet)
- ☐ Existing and proposed utility laterals and services with stations or dimensions labeled for proposed location. Make sure none of these are located within bus turnouts, valley gutters or sidewalk ramps.
- ☐ Residential only: Provide typical water/sewer service location detail
- ☐ Water & sewer line bearings labeled when not parallel with centerline
- ☐ Denote project's Water Pressure Zone and lots that require a pressure reducing valve (PRV)
- ☐ Same size on size tap to existing main is prohibited
- ☐ Include water main joint deflection note: As a part of the inspection requirement, a registered Professional Land Surveyor shall confirm in writing/stamped (official confirmation) that the horizontal/vertical deflections of pipe placement are within the maximum allowable joint deflection per UDACS 2.07.01. City will acquire GPS points of the installed water line upon receipt of an official confirmation from the Surveyor.
- ☐ Use wrapped ductile iron for all DIP restraint joint calculations
- ☐ All buildings require a separate meter
- ☐ Asphalt patches shown and labeled with note, which states: **THE SAWCUT LINES AND LIMITS OF A.C. REMOVAL AND REPLACEMENT SHALL BE DETERMINED BY A CNLV CONSTRUCTION SERVICES INSPECTOR; A.C. SHALL BE REPLACED BY MECHANICAL MEANS. TRENCH BACKFILL MATERIAL SHALL BE SAMPLED, DESIGNED, TESTED AND CERTIFIED PER CNLV TRENCH BACKFILL POLICY.**
- ☐ Show separated sidewalk, if required by CNLV Municipal Code or Planning Commission conditions of approval
- ☐ Look for locations of existing dry utility facilities (power poles, utility boxes, transformers, etc) and make sure that they are located behind back of future curb and not within proposed driveways and bus turn outs or in conflict with proposed utilities.
- ☐ Approval blocks for Building and Fire Safety located in the lower right corner of the plans
- ☐ All Nevada Energy easements, appurtenances, lines and poles must be shown and shall be located entirely within the perimeter landscape area of this development. Distribution lines, existing or proposed, shall be placed underground if impacted by the proposed development of the parcel or if the pole impedes upon the proper ADA clearances for sidewalk. Under no circumstances will new down guy wires be permitted.
- ☐ Project specific utility notes and the CNLV Utility Disclaimer ("City of North Las Vegas Utility Department Disclaimer: A statement of understanding between the City of North Las Vegas Utility Department (City) and any and all subsequent users of information obtained herefrom:

Checklist (cont.)

UTILITY PLAN (CONT.)

The plans and supporting information is furnished by the City, and is accepted/used by the recipient with the understanding that the City makes no warranties, express or implied, concerning the accuracy, completeness, reliability, or suitability of said plans or any supporting data and further understands that all users are acting at their own risk. The City shall be under no liability whatsoever resulting from any use of this information. This information should not be relied upon as the sole basis for existing water and/or sewer locations. The Engineer shall check and verify all dimensions and locations of existing utilities.")

- ☐ Existing dry utilities and appurtenances (except for SWG) relocated behind curb
- ☐ Show all existing easements and recorded document information that created it
- ☐ Show public utility easements proposed with this project, whether granted by separate document or map
- ☐ Show loading pad easement (5'x25') at back of CAT bus turnout
- ☐ Show dimension of rights-of-way and common elements
- ☐ Existing and proposed water and sewer facilities with dimensions, labels, and identification as public or private with ownership denoted
- ☐ Finished Floor Elevations (verify that they match the Grading Plan elevations)
- ☐ Sewer main >15' deep will need to be C900 material; <4' of cover shall be ductile iron
- ☐ Fire and domestic services require separate main connections
- ☐ **Fire Flow Requirements**
  - **Minimum number of hydrants.** The minimum number of fire hydrants required to meet the fire flow shall be based on a maximum flow of 1,000 gallons per minute per hydrant. All hydrants utilized in providing the fire flow shall be within 750 feet of the structure being protected as measured along the street or approved fire apparatus access road.
  - **Hydrants on adjacent properties.** Fire hydrants on adjacent properties shall not be considered unless fire apparatus access roads extend between properties and recorded easements are established.
  - **Fire flow requirements and building information for each structure**
    - Maximum square footage of proposed buildings
    - Type of construction
    - Maximum area separated by 4 hour rated walls for commercial/industrial sites
    - Occupancy group of each building in accordance with the Building Code
    - Height of each building
    - Number of stories
    - Whether the buildings have fire sprinklers and the type of system
    - Resultant fire flow in accordance with Fire Code Appendix III-A

REQUIRED FIRE FLOW FOR ONE- AND TWO- FAMILY DWELLINGS, GROUP R-3 AND R-4 BUILDINGS AND TOWNHOUSES

FIRE FLOW CALCULATION AREA (square feet)	MINIMUM FIRE FLOW (gallons per minute)	FLOW DURATION (hours)
0-3,600	1,000	1
3,601 and greater	Value in Table B105.1(2)	Duration in Table B105.1(2) at the required fire-flow rate
3,601 and greater with automatic sprinkler system	1/2 Value in Table B105.1(2) but not less than 1,000	Duration in Table B105.1(2) at the required fire-flow rate

For SI: 1 square foot = 0.0929 m^2, 1 gallon per minute = 3.785 L/m.

REQUIRED FIRE FLOW FOR BUILDINGS OTHER THAN ONE- AND TWO-FAMILY DWELLINGS, GROUP R-3 AND R-4 BUILDINGS AND TOWNHOUSES

AUTOMATIC SPRINKLER SYSTEM (Design Standard)	MINIMUM FIRE FLOW (gallons per minute)	FLOW DURATION (hours)
No *automatic sprinkler system*	Value in Table B105.1(2)	Duration in Table B105.1(2)
Section 903.3.1.1 of the International Fire Code	High-rise Buildings: 75% All Other Buildings: 50% of the value in Table B105.1(2)[a]	Duration in Table B105.1(2) at the reduced flow rate
Section 903.3.1.2 of the International Fire Code	High-rise Buildings: 75% All Other Buildings: 50% of the value in Table B105.1(2)[ab]	Duration in Table B105.1(2) at the reduced flow rate

For SI: 1 gallon per minute = 3.785 L/m

a. The reduced fire flow shall be not less than 1,500 gallons per minute

- ❖ The fire flow for industrial/commercial buildings may be reduced by separating the building into fire areas using a 4-hour rated wall with no openings and a 30-inch parapet. Where this option is selected, the location of the walls must be shown on the plans.

☐ **Where required.** Approved automatic sprinkler systems in new buildings and structures shall be provided throughout all buildings and structures, regardless of occupancy type and including buildings and structures in accordance with the International Residential Code, which meet one of the following requirements, and additionally in the locations described in Sections 903.2.1 through 903.2.12:

- ➢ Buildings constructed in accordance with the International Building Code, where the building area exceeds 5,000 square feet (464 m2)
  - ❖ A *dedicated* 1-hour rated automatic fire sprinkler room with exterior door is required unless a free-standing or wall-mounted Post Indicator Valve (PIV) is provided for sprinkler valve control.
  - ❖ Where more than one building is protected by a common fire protection water supply and where more than one building on that water supply requires a fire pump to achieve the minimum pressure requirements for a sprinkler system, a minimum of two fire pumps shall be installed to supply the private fire protection loop. Each fire pump shall be provided with its own individual tie-in to the city water supply.
- ➢ Buildings constructed in accordance with the International Residential Code, where the building area exceeds 5,000 square feet (464 m2).
  - ❖ When fire sprinklers are required in a one- or two- family dwellings, and the supply is by a combined domestic and fire water service, the appropriate sized meter shall be installed.
- ➢ For any buildings, not otherwise requiring fire sprinklers, where the available fire flow does not meet the fire flow requirements of the fire code
- ➢ Throughout all buildings with a Group R *fire area*
- ➢ Throughout all buildings containing a Group S-1 occupancy

☐ **Fire hydrant locations.** Fire hydrants shall be provided along required fire apparatus access roads.

☐ **Supply and Underground Mains.**

- ➢ **Supply points.** Two sources of water supply are required whenever 4 or more fire hydrants and/or sprinkler (per Section 903.3.1.1 and/or 903.3.1.2) lead-ins are installed on a single system. Two connections to the same main shall be permitted provided that the main is valved such that an interruption can be isolated.

Checklist (cont.)

UTILITY PLAN (CONT.)

- **Sectional Control Valve.** For systems required to have two sources of water supply per C104.1, sectional control valves shall be installed so that no more than 2 fire hydrants and/or fire sprinkler (per Section 903.1.1 and/or 903.3.1.2 only) lead-ins can be out of service due to a service interruption.
- **Minimum Size of Line.** Supply lines feeding multiple fire hydrants shall have a minimum diameter of 8 inches, with a dead-end maximum length of 150 feet of 6-inch underground pipe supplying only one hydrant.
- **Pressure Rating.** Underground piping shall have a minimum working pressure of 150 psi (Class 235). Underground piping connected to a fire pump or a Fire Department Connection (FDC) shall have a minimum working pressure of 200 psi (Class 305).
- **Restraint.** All underground water lines shall be restrained in accordance with applicable codes and standards.
- **Listings.** All on-site underground water mains and materials shall be U.L. listed, A.W.W.A. compliant, and shall be rated for the appropriate working pressure.

TRAFFIC

- ☐ Must be its own separate sheet; except in cases where no offsites are being constructed Traffic Plan may be combined with Fire Access Plan
- ☐ Engineer's seal in accordance with NRS 625 and NAC 625
- ☐ CNLV project number located in the lower right hand corner of each plan sheet (will be assigned after initial submittal of the civil plans)
- ☐ Signature block for City Traffic Engineer located in the lower right hand corner
- ☐ North arrow (pointing upward or to the right) and bar scale (1"=40' maximum)
- ☐ Full compliance with ALL requirements set forth in the Traffic Study Acceptance Letter
- ☐ Adjacent project plans denoted on the plan sheets – provide names, improvements (existing and proposed) and line work
- ☐ Call Before U Dig/Call Before You Overhead note
- ☐ Reference NV Energy work to include NVE Project I.D.#
- ☐ Legend correctly shown to match plans (can be on cover, note or detail sheet)
- ☐ Construction Notes must call out the appropriate Clark County Area Uniform Standard Drawing (CCAUSD)
- ☐ Show traffic control and improvements a minimum of 500 feet in each of direction, including existing driveways on both sides of the roadway
- ☐ Place permanent striping on permanent improvements. Temporary striping on permanent asphalt will not be permitted unless deemed necessary due to right-of-way restrictions or other significant issues. Additional asphalt and striping may be needed to reconcile the lane lines and eliminate sawtooth pavement transitions.
- ☐ Approved street names and identification as public or private
- ☐ Denote all NDOT right-of-way
- ☐ Street widths
- ☐ Show existing power poles. Distribution poles may NOT be replaced if impacted by the development. Lines must be placed underground.
- ☐ Show separated sidewalk, where required
- ☐ Sidewalk ramps (CCAUSD 235)
- ☐ Minimum five (5) foot wide unobstructed sidewalk; streetlight location per CCAUSD 320
- ☐ Show loading pad dedication (5'x25') at back of CAT bus turnout (CCAUSD 234.2)
- ☐ Show dimension of rights-of-way and common elements

Checklist (cont.)

TRAFFIC (CONT.)

- ☐ Minimum right-of-way clearly depicted at intersections per CCAUSD 201
- ☐ 0 inch lip driveways allowed on internal residential streets only and must be identified as such
- ☐ Show existing and proposed signs. Call out the type, street station and offset distance
- ☐ Speed limit (R2-1) 18”x24”; Subdivisions posted at 25mph at all entrance
- ☐ STOP signs (R1-1) at all commercial driveways; less than 80’ ROW R1-1 to be 30”; greater than or equal to 80’ ROW R1-1 to be 36”; 4-way stop not allowed without engineering study
- ☐ Street name signs (D3); approaching 80’ or greater ROW to be 12” tall otherwise 9” tall per CCAUSD 250
- ☐ NO OUTLET signs (W14-2a) install 2 back to back on R1-1/D3 assembly with arrows pointing toward no outlet
- ☐ NO PARKING (R7-1APR) on streetlight pole and show direction of arrows on plan; required on all 80’ or greater ROW
- ☐ Valley gutters not permitted across 80’ or greater ROW. Gutters per CCAUSD 228
- ☐ End of road slopes: 6:1 max if traversable, if not, provide Type III barricade with two R11-2 ROAD CLOSED signs; use advance warning signs – DEAD END (W14-1) or PAVEMENT ENDS (W8-3)
- ☐ Parallel slopes and road side embankments must conform to AASHTO Roadside Design Guide, latest edition. NOTE: Drainage Study requirements DO NOT supercede AASHTO requirements
- ☐ Vertical curves required for grade breaks greater than or equal to 1%
- ☐ Provide School Sign legend with MUTCD 2009 codes
- ☐ All school speed limit signs are 36”x48”
- ☐ School flasher pole with sign and luminaire (CCAUSD 745); school flasher signal assemblies (CCAUSD 747, 741and 742); school flasher conduit and wiring details
- ☐ Proposed walking paths, crosswalks, and school signage must be surveyed and shown in plan view
- ☐ Fluorescent yellow green is the only acceptable color when used for school signage and pedestrian crossings
- ☐ Centerline intersection stationing
- ☐ Existing and proposed street light stationing and watts (CCAUSD 320); circuit designators if calling out multiple circuits. Each service is to be clearly identified and have a unique number identifier. Each circuit of each service (max 2) must be identified as “A” or “B”
- ☐ When relocating streetlight circuit, continuity must be maintained without splicing. Pull boxes shall not be used for splicing.
- ☐ Pull boxes MUST be used at BCR & ECR; at any change in conduit direction; when there are 3 conduits connected and a streetlight is NOT in the vicinity; if there is more than 300’-500’ between streetlights; or if there are more than four 90-degree bends in the conduit
- ☐ Streetlight capacity verification required when connecting new streetlights to existing service points
- ☐ Install street light and foundation per CCAUSD 314, 320, and 321
- ☐ 15’ mast arms shall be used at all bus turn outs and right turn lanes (CCAUSD 316)
- ☐ Street light conduit and service points(onsite/private circuits to be separate from offsite/public circuits)
- ☐ Service pedestal: 200 AMP pad mount service pedestal (CCAUSD 730, 331, 332.S1, and 335.S1)
- ☐ Provide pull boxes for all conduits 5' prior to end of improvements / sidewalk
- ☐ All empty conduit must have tracer wire (CCAUSD 889)
- ☐ Call out 2” streetlight conduit with 2-#4 and 1-#8 THW copper conductors
- ☐ Connect to existing 1-1/4” or 2" conduit using a 3 ½ pull box

Checklist (cont.)

TRAFFIC (CONT.)

- ☐ Intercept existing 1-1/4" or 2" streetlight conduit with proposed empty conduit (pull wire only) and connect using a 3 ½ pull box (for future emergency backup lighting)
- ☐ No streetlight conduit to be provided in undeveloped areas. Conduit must be protected by sidewalk
- ☐ Conduit must be stubbed and capped (with tracer wire only) 5' past the improvements/property line or to the opposite side of ROW for future streetlight connections (CCAUSD 889) when right-of-way exists
- ☐ Conduit crossing ROW intersections must be placed under the valley gutter or in the same location if a valley gutter is not provided
- ☐ Conduit crossing only at intersections. Conduit crossing T intersections will only be allowed on 60' or less ROW
- ☐ All conduit bends for traffic signals and interconnect lines shall have PVC coated rigid conduit bends with a minimum radius of 24"
- ☐ 80'x80'/80'x100'/100'x100' and greater intersections require future signal details on the plan
- ☐ Deviation from CCAUSD requires streetlighting study
- ☐ Streetlight clearance at overhead high voltage power lines must be a minimum of 10'
- ☐ Non-standard poles (less than 30') must be approved by CNLV (CCAUSD 313)
- ☐ Streetlights must be 1 foot from the BCR at intersections. Streetlights shall be a minimum of 6 feet from the BCR at driveways (CCAUSD 222.1, 300 series)
- ☐ Streetlights to be a minimum of 3 feet from drop inlets
- ☐ Block wall behind sidewalk must be notched a minimum of 1.5 feet x 3 feet for streetlight clearance and a concrete pad shall be installed per CCAUSD 320.1
- ☐ NDOT breakaway poles required for posted speeds greater than 55 mph on NDOT ROW
- ☐ If trenching near a signalized intersection is proposed, the plan must show existing conduit and loop detectors, if applicable
- ☐ 4" PVC fiber optic conduit on 80-foot ROW (both sides) and 4" PVC fiber optic conduit on 100-feet or greater ROW (both sides); a #8 green conductor and 72 strand single mode fiber shall be installed in all empty conduit' P30 pull boxes with "FIBER OPTIC" inscribed on the lid; Type 200 splice vault shall be used where trunk lines meet at intersections
- ☐ Show any FAST and/or CNLV fiber optic interconnect cable to be impacted and/or installed
- ☐ Drive aisle labeled with a minimum width of 24 feet
- ☐ Sight distance triangles (CCAUSD 201.2) with dimensions or call-outs
- ☐ Commercial developments fronting 80' and greater ROW driveway widths must be a minimum of 32 feet wide, lip to lip with curb return radii of 25 feet ingress and 15 feet egress; one-way driveways are prohibited
- ☐ Commercial developments fronting less than 80' ROW driveway widths must be a minimum of 28 feet wide, lip to lip, with curb return radii of 25 feet ingress and 15 feet egress
- ☐ All utilities must be a minimum of 6 feet away from the end of the curb return (CCAUSD 222.1)
- ☐ All driveways are to be constructed per CCAUSD 222.1 and 225 unless otherwise approved by the City Traffic Engineer
- ☐ Gated entrances must be set back a minimum of 50 feet from the lip of gutter to the call box. Separate lane for visitor traffic. 48 foot radius turn-around.
- ☐ Existing and proposed pavement markings (including bike routes) and proposed match to existing pavement markings, including approaching legs of intersections
- ☐ Bus turnouts
- ☐ Flared intersections per CCAUSD 201.1. Added right turn lane (CCAUSD 246) must include dimensions and R3-7R signs. Forced right turn land (CCAUSD 246.6) must include dimension of drop and storage lane and R3-7R signs.
- ☐ Show detail of turn lane legends and dimensions
- ☐ Crosswalk per CCAUSD 254

Checklist (cont.)

TRAFFIC (CONT.)

- ☐ Call out Type 4 lane lines (CCAUSD 244.1)
- ☐ Medians:
  - ☐ PCC Median must be constructed per CCASD #218 – TACK ON NOT PERMITTED
  - ☐ PCC Median island treatment on N. 5th St.: CONCRETE COLOR: SOLOMON COLORS-COLOR FLO 413-4% LOADING "TERRA COTTA" OR APPROVED EQUAL; CONCRETE PATTERN: BOMANITE *4" GRANITE SETTS* OR APPROVED EQUAL
  - ☐ Must be constructed with an additional lane in the opposing direction by the first developer in along 100' or greater ROW. Opposing lane width = 12' with a 4' paved shoulder as depicted on CCAUSD 209
  - ☐ Minimum width of median at turn lane = 4' as measured from curb face-curb face
  - ☐ Median nose marking per CCAUSD 248;
  - ☐ If driveway exists opposing a median island, the entire island is to be painted yellow with reflective paint; line approaching centerline markings to right of island (200' minimum adjustment, show detail); Tuff post bollards (or approved equal) in lieu of R4-7 sign;
  - ☐
- ☐ Property access per Title 17.24.040
- ☐ Street intersections shall be offset a MINIMUM of 200' per Title 16.20.050
- ☐ Closing pavement transitions; 200' minimum; OMR-3R spaced at 35' OC on 80' ROW or greater and 25' OC on 60' ROW or less; 8" white painted edge line on closing tapers; 4" white painted edge line on open tapers and straight sections
- ☐ Merging tapers to comply with MUTCD section 3B
- ☐ Type I centerline transition to Type II centerline; provide details (CCAUSD 245); paint is not acceptable
- ☐ Reverse curve; show design speed, radius, and length of curve
- ☐ Master street lighting for master plan/multi-phase projects
- ☐ Access roads must be a minimum of 32' wide per CCAUSD 209 with 4" white painted edge line 4' from edge of pavement. Type I centerline per CCAUSD 244
- ☐ If adjacent to North 5th, must design and construct ultimate street section per CNLV approved typical section.
- ☐ If applicable, add note "NDOT Encroachment Permit required for all work done within State Right-of-way)
- ☐ For emergency access or homes facing 60' streets, CCAUSD 226.S1 must be used
- ☐ Removal of existing striping may include milling and overlay
- ☐ If at an intersection where the City is constructing a signal, check plans against City design
- ☐ Look for locations of existing dry utility facilities and make sure that they are located behind back of future curb and not within proposed driveways and bus turn outs
- ☐ Table/List of public and private traffic quantities - must match Bond & Fee Estimate
- ☐ Print sizes L80 or greater

PLAN AND PROFILE SHEETS

- ☐ North arrow (pointing upward or to the right) and bar scale (1"=40' maximum)
- ☐ Engineer's seal in accordance with NRS 625 and NAC 625
- ☐ CNLV project number located in the lower right hand corner of each plan sheet (will be assigned after initial submittal of the civil plans)
- ☐ Adjacent project plans denoted on the plan sheets – provide names, improvements (existing and proposed) and line work
- ☐ Approved street names and identified as public or private
- ☐ Denote NDOT right-of-way
- ☐ Provide intersection design for the entire intersection including quadrants of future development

Checklist (cont.)

PLAN AND PROFILE SHEETS (CONT.)

- ☐ Refer to North Neighborhood Study for proposed FG at undeveloped intersections
- ☐ Plan view above profile
- ☐ Provide an identical key map for all plan and profile sheets, clearly identifying all the plan and profile sheets and the current sheet hatched relative to overall project development
- ☐ Line and curve data for the segment shown on the plan view, including median islands if not shown on the Horizontal Control Plan
- ☐ Call Before U Dig/Call before you Overhead note; FAST
- ☐ Benchmark
- ☐ Rights-of-way and sidewalks labeled and dimensioned
- ☐ Where matching into existing streets, a minimum of 200' of the existing street must be shown on the plan view and profile. Where vertical curves exist or longer transitions per MUTCD are required the plan and profile of the street shall be extended.
- ☐ Centerline street stationing at 50 foot intervals and at pc/pt, grade breaks, etc.
- ☐ At centerline street intersections provide station equation
- ☐ Existing and proposed elevations at centerline in profile shown and labeled
- ☐ Proposed profile shown and labeled as FG or TC
- ☐ Limits of scarping and existing contours (extend contours a minimum of 100-feet beyond project limits) shown on the plan view
- ☐ Proposed profile shown and labeled as FG or TC
- ☐ Street slopes labeled (0.4% min) – if 0.4% cannot be provided because of existing conditions, drop inlets every 100-feet and storm drain will need to be provided.
- ☐ Utility crossings shown and checked to meet location, separation and cover requirements. Provide invert elevation and top of pipe for all proposed crossings
- ☐ Sewer pipe size, length, and material labeled
- ☐ Sewer line bearings labeled when not parallel with centerline
- ☐ Sewer slopes labeled
- ☐ Sewer connection: Existing pipe size, slope and material must be labeled
- ☐ New water mains 8-inch and larger with required cover provided at center of the main
- ☐ Depict computed lengths of mechanical restrained joint calculations on profile with stationing
- ☐ Existing water and sanitary sewer, as required by Utilities Department
- ☐ Manhole number, size, station and offset, rim, and inverts labeled (minimum 0.2' drop checked for sanitary sewer)
- ☐ Storm drain shown with type, size, length, HGL, Q_{100} and slope
- ☐ Locking manholes are not permitted in CNLV. Hydrovent manhole or equal are acceptable
- ☐ All storm drain laterals shall be profiled
- ☐ All water and sewer main stubs to adjacent property shall be profiled
- ☐ Sawcuts of existing asphalt labeled
- ☐ Asphalt patches shown and labeled with note, which states: **THE SAWCUT LINES AND LIMITS OF A.C. REMOVAL AND REPLACEMENT SHALL BE DETERMINED BY A CNLV CONSTRUCTION SERVICES INSPECTOR; A.C. SHALL BE REPLACED BY MECHANICAL MEANS. TRENCH BACKFILL MATERIAL SHALL BE SAMPLED, DESIGNED, TESTED AND CERTIFIED PER CNLV TRENCH BACKFILL POLICY.**
- ☐ Street sections w/ pavement thickness (for bonding purposes) sections shall be a minimum of: 100-foot ROW = 6” AC over 20” Type II; 80-foot ROW 5” = AC over 14” Type II; 60-foot ROW = 4” AC over 12” Type II; 48-foot ROW and private streets = 2” AC over 10” Type II). Actual sections will be determined at the time of construction.

Checklist (cont.)

PLAN AND PROFILE SHEETS (CONT.)

- ☐ Add this note to the sheet showing the typical sections: "**THE OFF-SITE PAVEMENT SECTIONS SHOWN ON THE PLANS ARE FOR REFERENCE ONLY. THE ACTUAL SECTION MUST BE DESIGNED IN ACCORDANCE WITH STANDARD SPECIFICATION SECTION 401 USING THE AASHTO MODEL. UPDATED SECTIONS MUST BE BASED ON TRAFFIC COUNTS PROVIDED BY THE CITY AND R-VALUE TEST RESULTS PERFORMED SUBSEQUENT TO GRADING.**"
- ☐ Provide 2% roadway cross slope for new construction; 1.5% - 3.5% roadway cross slope when matching into permanent existing asphalt
- ☐ Sidewalk ramps w/ A & B dimensions
- ☐ Road section overpave shown and labeled, where required (See attachment)
- ☐ Pavement transitions at end of construction (length per MUTCD)
- ☐ Adjacent existing or future conditions (verify they are shown accurately by cross checking with plans)
- ☐ Vertical curves shown and labeled, where needed
- ☐ Cul-de-sacs checked for a minimum 1% slope from HP to all adjacent edge of ac at lip of gutter locations. Slope of curb in the radius shall be 1% minimum to facilitate drainage
- ☐ Crown transition shown and stationed
- ☐ Valley gutter shown and labeled, including FL's (must be constructed to opposite spandrel if first development at intersection, with erosion protection provided at the terminus)
- ☐ Intersection grading checked (1% in VG from midpoint of BCR)
- ☐ Label TC's, FL's, HP's, and FG's
- ☐ Median island design must be shown, when required, and must be constructed per CCASD 218 – TACK ON ISLANDS NOT PERMITTED. First development in along 100-foot streets must construct the median and one lane on the opposite side (all 100-foot or greater streets – landscaping required; separate application must be submitted to Public Works - The developer's landscape architect should contact Public Works at 633-2312, for landscaping requirements prior to designing the landscape plan(s) for the median. Final approval of the civil improvement plans will not be acquired prior to approval of the landscaping plans.)
- ☐ When median island landscaping is required, provide meter and backflow along the perimeter street and sleeve to median island for irrigation purposes
- ☐ First development in along 80-foot streets must construct the full half street, including the two-way left turn lane and one permanent travel lane on the opposite side (See attachment)
- ☐ Look for locations of existing dry utility facilities and make sure that they are located behind back of future curb and not within proposed driveways and bus turn outs
- ☐ Print sizes L80 or greater

GRADING PLANS

- ☐ Engineer's seal in accordance with NRS 625 and NAC 625
- ☐ Benchmark
- ☐ Call Before U Dig/Call before you Overhead note; FAST
- ☐ Geotechnical report number and engineer, date. Verify that the report is less than one year old.
- ☐ Legend shown must match plans
- ☐ CNLV project number located in the lower right hand corner of each plan sheet (will be assigned after initial submittal of the civil plans)
- ☐ Print sizes L80 or greater

Checklist (cont.)

GRADING PLANS (CONT.)

- ☐ Approval block for Development and Flood Control Manager located in the lower right corner
- ☐ North arrow (pointing upward or to the right) and bar scale (1”=40’ maximum)
- ☐ Full compliance with ALL requirements set forth in the Traffic and Drainage Study Acceptance Letters
- ☐ Adjacent project plans denoted on the plan sheets – provide names, improvements (existing and proposed) and line work
- ☐ Provide intersection design for the entire intersection including quadrants of future developments
- ☐ Refer to North Neighborhood Study for proposed FG at undeveloped intersections
- ☐ If required, location and details with dimensions of BMP for parking lot low impact development
- ☐ Approved street names and identification as public or private
- ☐ Denote NDOT right-of-way
- ☐ Lot numbers and unit/building numbers where applicable
- ☐ Centerline stationing for all streets; station all intersections
- ☐ Sidewalk ramps w/ A & B dimensions
- ☐ Sections at all property lines showing elevational relationship, property line, and any existing and/or proposed walls
- ☐ Developing adjacent to existing residential subdivisions: Proposed residential pads should only be elevated a maximum of 2’ higher than existing adjacent residential pads
- ☐ Provide an identical key map for all grading plans, with all the grading plan sheets labelled and the current sheet hatched relative to overall project development
- ☐ Details and sections shown and referenced on appropriate sheets as indicated
- ☐ Provide 2% roadway cross slope for new construction; 1.5% - 3.5% roadway cross slope when matching into permanent existing asphalt
- ☐ Street slopes labeled (0.4% min)
- ☐ Top of Curbs (TC), Flow Lines (FL), High Points (HP), and Finish Grade (FG) elevations shown in appropriate intervals to adequately grade the site. (At maximum 100’ intervals and all horizontal and vertical breaks)
- ☐ Finish floor, garage finish floor and pad elevations
- ☐ Maximum residential driveway slope to be 12%
- ☐ For residential lots, 1% minimum lot drainage swales with Type A drainage and high point elevations; show all lot dimensions
- ☐ Edge conditions: Check to make sure water doesn’t pool - scarps required?
- ☐ Edge conditions: Notarized permission to grade and construct?
- ☐ Edge conditions: Drainage easement required?
- ☐ Edge conditions: Retaining wall required?
- ☐ Scarps and/or retaining walls (retaining wall height must not exceed 6’ and must meet all requirements of Title 17 – see drainage study check list)
- ☐ Provide limits of proposed retaining walls
- ☐ Provide top of footing, top of retaining wall and finish grade elevations
- ☐ Perimeter wall footing detail (schematic only, no structural design). Perimeter walls not within the development must use offset footing to allow the wall to be ON the property line
- ☐ Proposed wall abutting existing wall must provide grout between walls. Texture and color to match existing wall and cap the space between walls
- ☐ Cul-de-sacs checked for a minimum 1% slope from HP to all adjacent edge of ac at lip of gutter locations. Slope of curb in the radius shall be 1% minimum to facilitate drainage
- ☐ Valley gutter shown and labeled, including FL’s –verify positive drainage across the driveway or intersection, 0.4% slope minimum and match street grade

Checklist (cont.)

GRADING PLANS (CONT.)

- ☐ Adjacent finish floor elevations and spot grades adjacent to site (both existing/future conditions)
- ☐ Existing contours shown at 1-foot interval and labeled (extending a minimum of 100' beyond property lines or to street centerline where R.O.W. exists)
- ☐ Pavement transition lengths per MUTCD
- ☐ Vertical curves are required for grade differential greater than or equal to 1%
- ☐ Provide a barrier to prevent vehicular access to unpaved areas (i.e. AC curb, boulder, berm, barricade, etc.)
- ☐ Sight distance triangles shown and labeled
- ☐ Flood zones delineated on drawing with BFE's shown when site is impacted by a FEMA special flood hazard zones. CLOMR/LOMR required.
- ☐ 32' access road shown, when required
- ☐ Sidewalk underdrains shown when required. Nuissance flows must be conveyed under sidewalk
- ☐ Median design shown for 100-foot or greater right-of-way
- ☐ Proposed and existing easements with dimensions, elevations, and typical sections
- ☐ Pavement section shown on typical street sections
- ☐ Elevations (top of curb, flow line, and crown line) at project boundaries, limits of construction, PC's, PT's, grade breaks, and lot line extensions
- ☐ Locations of faults and fissures – residential structures must be offset from these geological features by 5 feet; commercial structures may indemnify the City in writing. Indemnification letter must be received and approved prior to approval of plans.
- ☐ Show existing power poles. Distribution poles may NOT be replaced if impacted by the development. Lines must be placed underground.
- ☐ Show drainage easements, existing and proposed; whether granted by separate document or map
- ☐ Show loading pad easement (5'x25') at back of CAT bus turnout
- ☐ Show dimension of rights-of-way and common elements
- ☐ Label common elements and limited common elements as such
- ☐ Show detached sidewalk along R.O.W., where required
- ☐ Check all grading and ensure that positive drainage is provided
- ☐ Ensure existing dry utility appurtenances are located behind back of future curb and not within proposed driveways and bus turn outs
- ☐ Perpendicular parking to the public R.O.W. shall be screened by perimeter landscaping or a decorative masonry wall with a minimum wall height of 3'
- ☐ New roadway should be +/- 2' from existing ground deviation to avoid excessive cut and fill, and surfaces that contrast with the surrounding terrain
- ☐ Provide debris/sediment trap basin at entrance of channel, culvert and public ROW (10' x10'x1' deep min.)
- ☐ The match line between grading plan sheets should not bisect lots. The match line should include the entire lot on one sheet
- ☐ For commercial and industrial developments, provide flowlines with grades and sidewalk underdrains for all landscape areas draining to public R.O.W.
- ☐ All drop inlets shall be located such that the curb opening or grate is a min. of 10 feet from curb returns
- ☐ All existing and proposed walls must be shown with sufficient adjacent ground elevations each side
- ☐ Every effort must be made to eliminate superimposed text, text on line, etc.Provide erosion protection at the upstream/downstream termini of curb and gutter, drive isles and swales

STRUCTURAL CALCULATIONS AND STRUCTURAL DRAWINGS SUBMITTAL GUIDELINES

- ☐ Submit two sets of structural calculations and structural drawings with a CD including all the structural calculations files, structural calculations report and structural drawings for the review, with CNLV # / PW # on the cover sheet of the structural calculations.
- ☐ The structural calculations cover sheet and all structural drawings have to be stamped and dated with a wet signature by a civil or structural engineer with engineering license issued by Nevada Board of Professional Engineers and Land Surveyors.
- ☐ In the structural calculations, provide a page for:
  - Jurisdiction: City of North Las Vegas
  - Project name
  - Project location
  - Project description
  - Design Code (e.g. IBC 2018, AASHTO LRFD 2017 8th Ed., ACI 318-14, etc.)
  - Programs with version used for the calculations
  - Provide an appendix for the reference material pages with coordinating numbers and the referenced data circled in red.
- ☐ In the structural calculations for each analyzed item, call out on the top right hand corner of all the pages for that analyzed item to indicate on what structural drawing sheet number and section number that analysis is for.
- ☐ Provide ONLY the related civil improvement plans and the civil improvement plans cover sheet together with the 24”x36” structural drawings (The civil improvement plans reference must be provided in 11”x17” included in the appendix of the calculations separated by a page labeled Appendix); and on the structural drawings, clearly indicate what civil improvement plan sheet number that those structurally analyzed items are located and with those analyzed items circled in red on those civil improvement plans.
- ☐ Please fold plans for submittal (rolled plans will not be accepted).
- ☐ Provide the geotechnical report related to the structural calculations if applicable. A CD for the geotechnical report is acceptable.
- ☐ Expect the review turnaround time to be two weeks minimum.
- ☐ Presubmittal meeting may be required. Contact Simon Luk at (702) 633-1254.

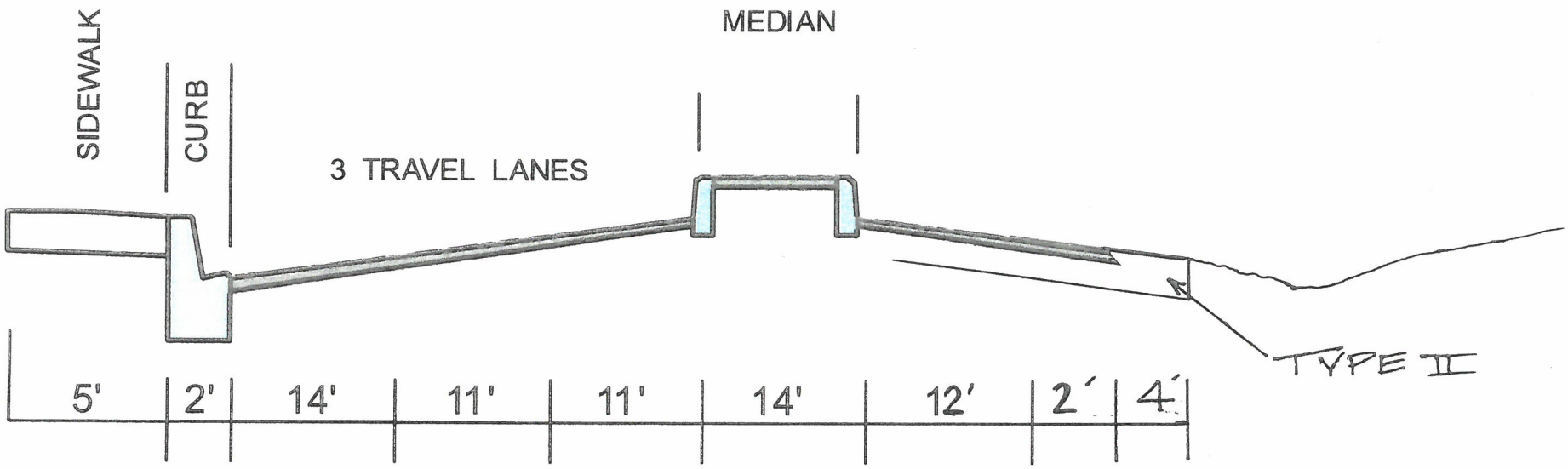
SIDEWALK
CURB
3 TRAVEL LANES
MEDIAN
TYPE II
5'
2'
14'
11'
11'
14'
12'
2'
4'

100' R / W

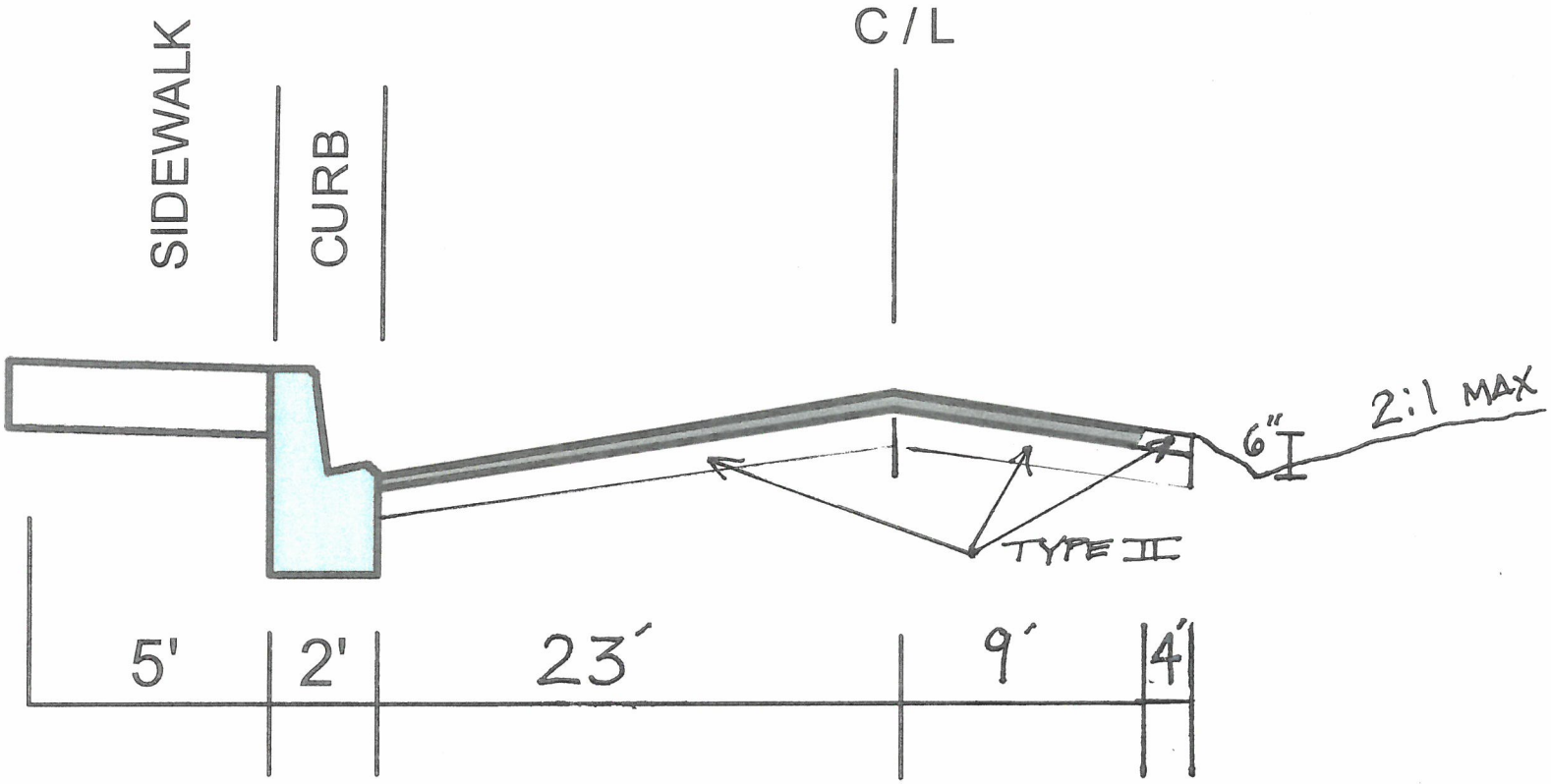

60' R / W (TYPICALLY, NO STRIPING)

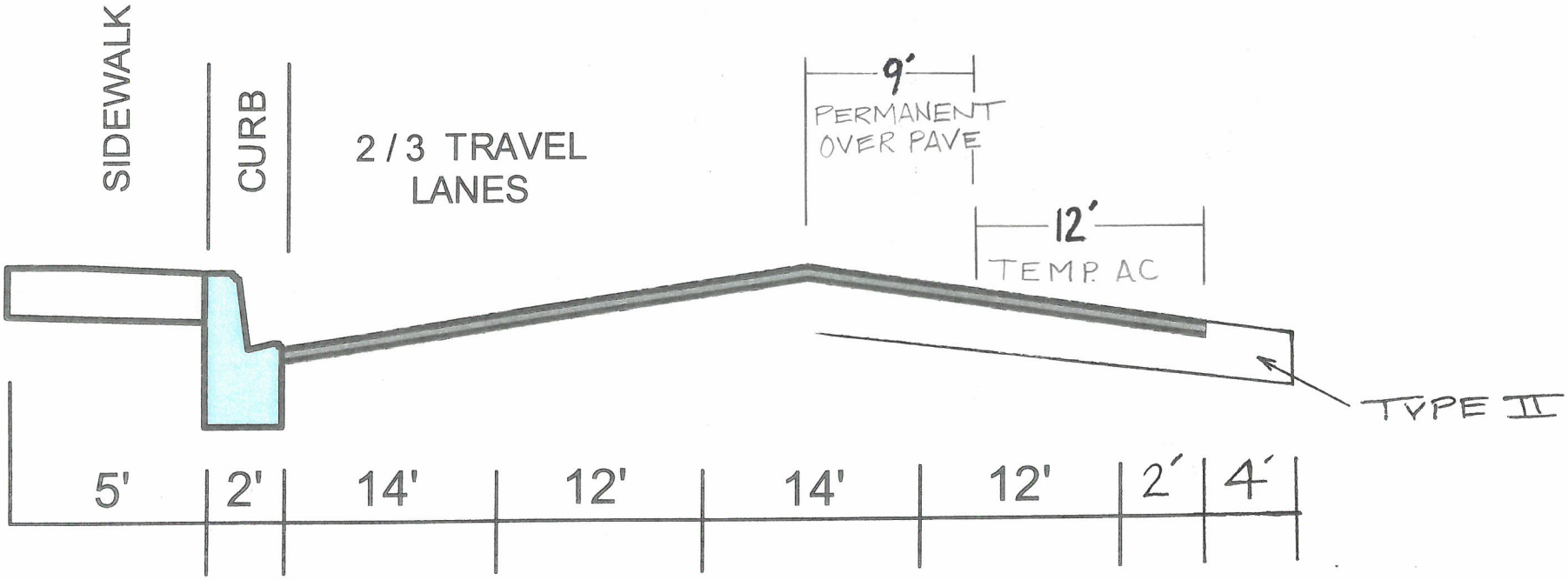
SIDEWALK
CURB
2 / 3 TRAVEL LANES
9'
PERMANENT OVER PAVE
12'
TEMP. AC
TYPE II
5'
2'
14'
12'
14'
12'
2'
4'

80' R / W