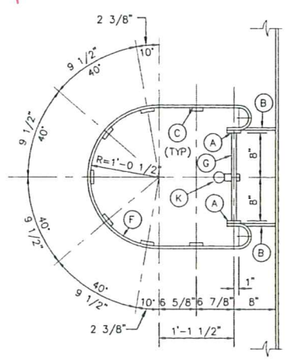

SECTION J
SCALE: 1" = 1'-0"

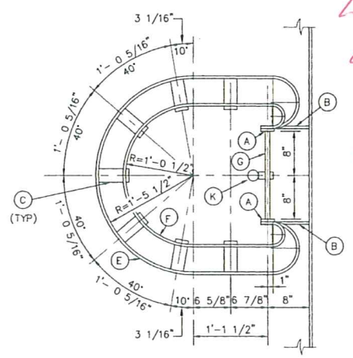

SECTION K
SCALE: 1" = 1'-0"

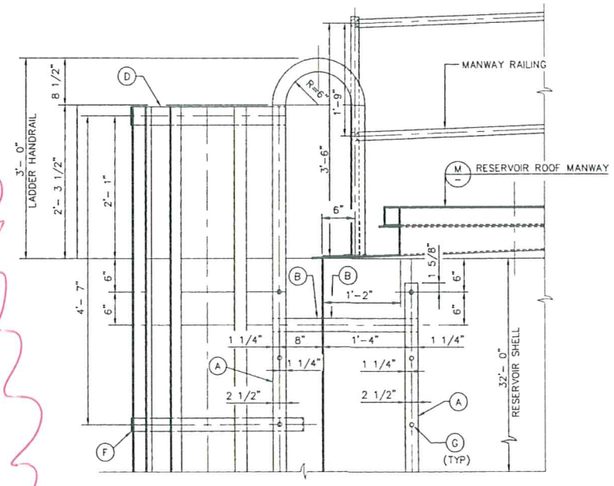

SECTION H
SCALE: 1" = 1'-0"

RESERVOIR LADDER MATERIAL			
MARK	DESCRIPTION	MARK	DESCRIPTION
A	2 1/2" BAR x 3/8"x (VARIES)	J	FALL PREVENTION SYSTEM ("NORTH CONSUMER PRODUCTS" SAFE-T-CLIMB TYPE 304 SSTL W/ REMOVABLE EXTENSION KIT)
B	2 1/2" BAR x 3/8" x (VARIES)		
C	1" BAR x 1/4" x (VARIES)		
D	3" BAR x 1/4" x 5'-2 3/4" (BEND)	K	FALL PREVENTION SYSTEM ("NORTH CONSUMER PRODUCTS" SAFE-T-CLIMB STANDARD GALV W/ SAFE-T-PIVOT DISMOUNT SECTION) EXTENDED 4'- 6" ABOVE RESERVOIR ROOF EDGE.
E	3" BAR x 1/4" x 9'-9" (BEND)		
F	2" BAR x 1/4" x 7'-13/16" (BEND)		
G	3/4"ø BAR x 1'-4 3/4"		
H	SAFETY POST - ("BILCO" LADDER UP MODEL)		

NOTE:

APPURTENANCES INSIDE THE RESERVOIR SHALL BE STAINLESS STEEL.

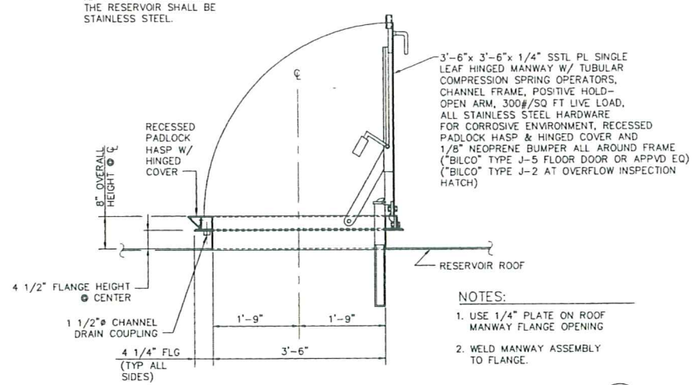

NOTES:

1. USE 1/4" PLATE ON ROOF MANWAY FLANGE OPENING
2. WELD MANWAY ASSEMBLY TO FLANGE.

SECTION M
SCALE: 3/4" = 1'-0"

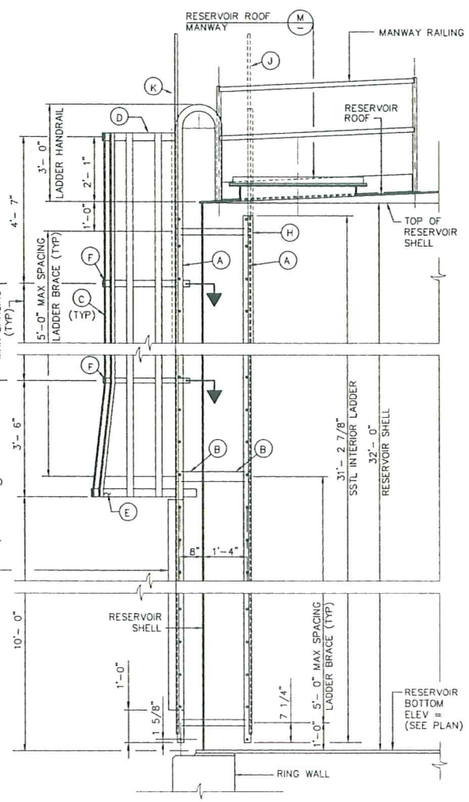

SECTION LA LB
SCALE: 1/2" = 1'-0"

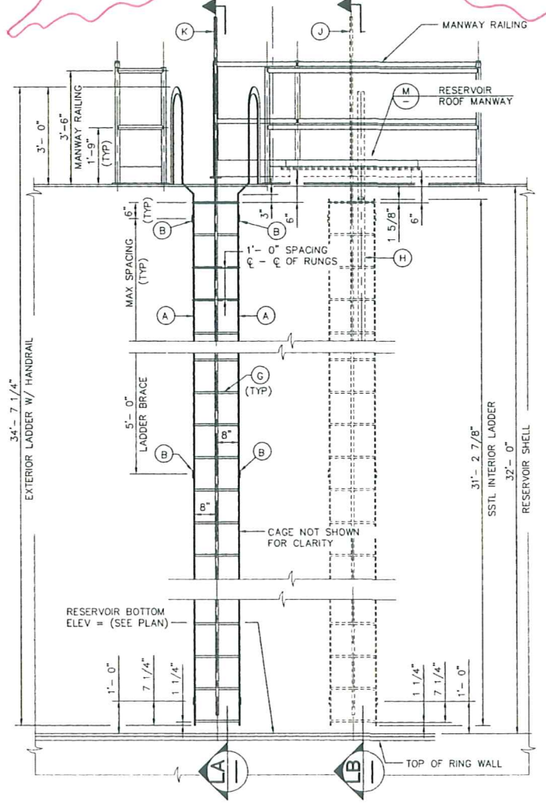

ELEVATION
SCALE: 1/2" = 1'-0"

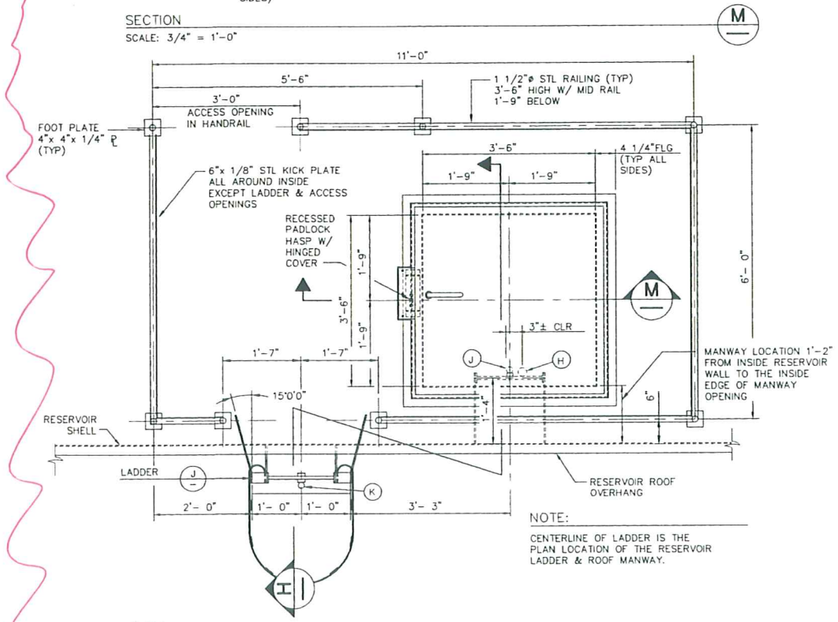

NOTE:

CENTERLINE OF LADDER IS THE PLAN LOCATION OF THE RESERVOIR LADDER & ROOF MANWAY.

PLAN
SCALE: 3/4" = 1'-0"

RESERVOIR LADDER, ROOF MANWAY AND RAILING DETAIL

1 / M6

SUBMITTAL 04/07/04

DATE: 4-8-04

REV	DATE	DESCRIPTION	DATE	AGENCY	APP.	DATE	DGN	APP

DESIGN: JCL
DRAWN: JCL
CHECK: HAD
ISSUE DATE:
ISSUE EDITOR:
PLOT DATE: 04-07-04
PLOT TIME: 08:29:06

G.C. WALLACE, INC.
Engineers/Planners/Surveyors
1555 SOUTH RAINBOW BLVD./LAS VEGAS, NEVADA 89146
TELEPHONE: (702) 804-2000 • FAX: (702) 804-2299
F:\560-211-308\dwg\mpro\MECHANICAL\304-006.DWG

CITY OF NORTH LAS VEGAS
2400 ZONE RESERVOIR
MECHANICAL DETAILS V

SHEET M6
22 OF 30 SHTS

84097